2L Jar - 60 x 20mm Paddle

VELOCITY GRADIENT [s-1]																
Speed [rpm]	Temperature[^{0}C/^{0}F]															
	0 / 32	2 / 35.6	4 / 39.2	6 / 42.8	8 / 46.4	10 / 50	12 / 53.6	14 / 57.2	16 / 60.8	18 / 64.4	20 / 68	22 / 71.6	24 / 75.2	26 / 78.8	28 / 82.4	30 / 86
10	1.9	1.9	2.0	2.1	2.1	2.2	2.3	2.3	2.4	2.4	2.5	2.6	2.6	2.7	2.7	2.8
20	5.3	5.5	5.7	5.8	6.0	6.2	6.4	6.6	6.7	6.9	7.1	7.2	7.4	7.6	7.8	7.9
30	9.7	10.1	10.4	10.7	11.1	11.4	11.7	12.0	12.4	12.7	13.0	13.3	13.6	13.9	14.2	14.6
40	15.0	15.5	16.0	16.5	17.0	17.5	18.0	18.5	19.0	19.5	20.0	20.5	21.0	21.5	21.9	22.4
50	20.9	21.7	22.4	23.1	23.8	24.5	25.2	25.9	26.6	27.3	28.0	28.7	29.3	30.0	30.7	31.3
60	27.5	28.5	29.4	30.4	31.3	32.2	33.1	34.1	35.0	35.9	36.8	37.7	38.6	39.4	40.3	41.2
70	34.7	35.9	37.1	38.3	39.4	40.6	41.8	42.9	44.1	45.2	46.3	47.5	48.6	49.7	50.8	51.9
80	42.4	43.9	45.3	46.8	48.2	49.6	51.0	52.4	53.9	55.2	56.6	58.0	59.4	60.7	62.1	63.4
90	50.6	52.3	54.1	55.8	57.5	59.2	60.9	62.6	64.3	65.9	67.5	69.2	70.8	72.4	74.0	75.6
100	59.2	61.3	63.3	65.3	67.4	69.3	71.3	73.3	75.3	77.2	79.1	81.1	83.0	84.8	86.7	88.6
110	68.3	70.7	73.0	75.4	77.7	80.0	82.3	84.5	86.8	89.1	91.3	93.5	95.7	97.9	100.1	102.2
120	77.9	80.6	83.2	85.9	88.5	91.1	93.7	96.3	98.9	101.5	104.0	106.6	109.1	111.5	114.0	116.4
130	87.8	90.8	93.8	96.8	99.8	102.8	105.7	108.6	111.6	114.4	117.3	120.1	123.0	125.7	128.5	131.3
140	98.1	101.5	104.9	108.2	111.6	114.8	118.1	121.4	124.7	127.9	131.0	134.3	137.4	140.5	143.7	146.7
150	108.8	112.6	116.3	120.0	123.7	127.4	131.0	134.6	138.3	141.8	145.3	148.9	152.4	155.8	159.3	162.7
160	119.9	124.0	128.1	132.2	136.3	140.3	144.3	148.3	152.3	156.2	160.1	164.0	167.9	171.7	175.5	179.3
170	131.3	135.8	140.3	144.8	149.3	153.7	158.1	162.4	166.8	171.1	175.3	179.7	183.9	188.0	192.2	196.3
180	143.0	148.0	152.9	157.8	162.7	167.4	172.2	177.0	181.8	186.4	191.0	195.7	200.4	204.9	209.4	213.9
190	155.1	160.5	165.8	171.1	176.4	181.6	186.8	191.9	197.1	202.2	207.2	212.3	217.3	222.2	227.1	232.0
200	167.5	173.3	179.1	184.8	190.5	196.1	201.7	207.3	212.9	218.3	223.8	229.3	234.7	239.9	245.3	250.5

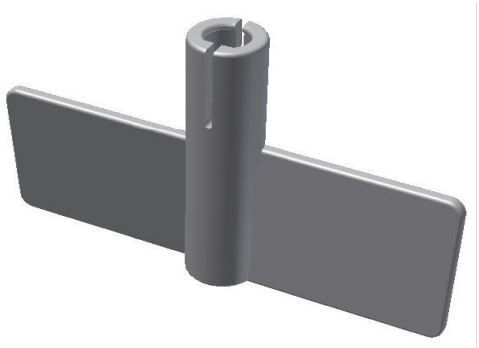

2L Jar - 75 x 25mm Paddle

VELOCITY GRADIENT [s-1]																
Speed [rpm]	Temperature[^{0}C/^{0}F]															
	0 / 32	2 / 35.6	4 / 39.2	6 / 42.8	8 / 46.4	10 / 50	12 / 53.6	14 / 57.2	16 / 60.8	18 / 64.4	20 / 68	22 / 71.6	24 / 75.2	26 / 78.8	28 / 82.4	30 / 86
10	3.3	3.4	3.6	3.7	3.8	3.9	4.0	4.1	4.2	4.3	4.5	4.6	4.7	4.8	4.9	5.0
20	9.4	9.8	10.1	10.4	10.7	11.0	11.3	11.7	12.0	12.3	12.6	12.9	13.2	13.5	13.8	14.1
30	17.3	17.9	18.5	19.1	19.7	20.3	20.8	21.4	22.0	22.6	23.1	23.7	24.3	24.8	25.4	25.9
40	26.7	27.6	28.5	29.4	30.3	31.2	32.1	33.0	33.9	34.7	35.6	36.5	37.3	38.2	39.0	39.9
50	37.3	38.5	39.8	41.1	42.4	43.6	44.9	46.1	47.3	48.6	49.8	51.0	52.2	53.4	54.5	55.7
60	49.0	50.7	52.3	54.0	55.7	57.3	59.0	60.6	62.2	63.8	65.4	67.0	68.6	70.1	71.7	73.2
70	61.7	63.9	66.0	68.1	70.2	72.2	74.3	76.4	78.4	80.4	82.4	84.5	86.5	88.4	90.4	92.3
80	75.4	78.0	80.6	83.2	85.7	88.3	90.8	93.3	95.8	98.3	100.7	103.2	105.6	108.0	110.4	112.8
90	90.0	93.1	96.2	99.2	102.3	105.3	108.3	111.3	114.3	117.2	120.2	123.1	126.0	128.9	131.7	134.5
100	105.4	109.0	112.6	116.2	119.8	123.3	126.9	130.4	133.9	137.3	140.7	144.2	147.6	150.9	154.3	157.6
110	121.6	125.8	129.9	134.1	138.2	142.3	146.4	150.4	154.5	158.4	162.4	166.4	170.3	174.1	178.0	181.8
120	138.5	143.3	148.1	152.8	157.5	162.1	166.8	171.4	176.0	180.5	185.0	189.6	194.0	198.4	202.8	207.2
130	156.2	161.6	166.9	172.3	177.6	182.8	188.0	193.3	198.5	203.5	208.6	213.7	218.8	223.7	228.7	233.6
140	174.6	180.6	186.6	192.5	198.5	204.3	210.2	216.0	221.8	227.5	233.1	238.9	244.5	250.0	255.6	261.0
150	193.6	200.3	206.9	213.5	220.1	226.6	233.1	239.5	246.0	252.3	258.6	264.9	271.2	277.3	283.4	289.5
160	213.3	220.7	227.9	235.2	242.5	249.6	256.8	263.9	271.0	277.9	284.8	291.9	298.7	305.4	312.3	318.9
170	233.6	241.7	249.6	257.6	265.6	273.4	281.2	289.0	296.8	304.4	312.0	319.6	327.2	334.5	342.0	349.3
180	254.5	263.3	272.0	280.7	289.4	297.9	306.4	314.9	323.4	331.6	339.9	348.3	356.5	364.5	372.6	380.6
190	276.0	285.6	295.0	304.4	313.8	323.0	332.3	341.5	350.7	359.6	368.6	377.7	386.6	395.3	404.1	412.7
200	298.0	308.4	318.6	328.8	338.9	348.9	358.8	368.8	378.7	388.4	398.1	407.9	417.5	426.9	436.4	445.7

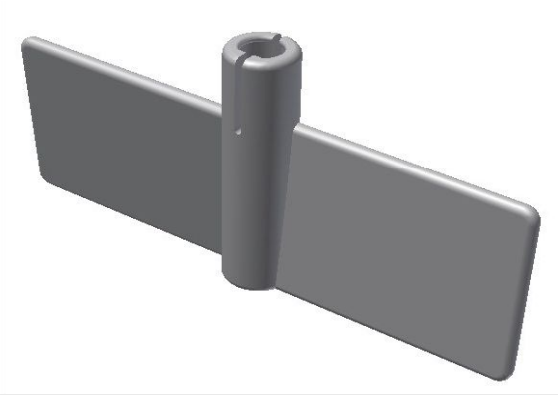

2L Jar - 80 x 35mm Paddle

VELOCITY GRADIENT [s-1]																
Speed [rpm]	Temperature[^{0}C/^{0}F]															
	0 / 32	2 / 35.6	4 / 39.2	6 / 42.8	8 / 46.4	10 / 50	12 / 53.6	14 / 57.2	16 / 60.8	18 / 64.4	20 / 68	22 / 71.6	24 / 75.2	26 / 78.8	28 / 82.4	30 / 86
10	4.5	4.7	4.8	5.0	5.1	5.3	5.4	5.6	5.7	5.9	6.0	6.2	6.3	6.5	6.6	6.7
20	12.7	13.2	13.6	14.1	14.5	14.9	15.3	15.8	16.2	16.6	17.0	17.4	17.9	18.3	18.7	19.1
30	23.4	24.2	25.0	25.8	26.6	27.4	28.2	29.0	29.8	30.5	31.3	32.0	32.8	33.5	34.3	35.0
40	36.0	37.3	38.5	39.8	41.0	42.2	43.4	44.6	45.8	47.0	48.1	49.3	50.5	51.6	52.8	53.9
50	50.4	52.1	53.8	55.6	57.3	59.0	60.7	62.3	64.0	65.7	67.3	68.9	70.6	72.2	73.8	75.3
60	66.2	68.5	70.8	73.1	75.3	77.5	79.7	81.9	84.2	86.3	88.5	90.6	92.8	94.9	97.0	99.0
70	83.5	86.4	89.2	92.1	94.9	97.7	100.5	103.3	106.0	108.8	111.5	114.2	116.9	119.5	122.2	124.8
80	102.0	105.5	109.0	112.5	115.9	119.3	122.8	126.2	129.6	132.9	136.2	139.5	142.8	146.0	149.3	152.5
90	121.7	125.9	130.0	134.2	138.3	142.4	146.5	150.5	154.6	158.5	162.5	166.5	170.4	174.3	178.1	181.9
100	142.5	147.4	152.3	157.2	162.0	166.8	171.6	176.3	181.1	185.7	190.3	195.0	199.6	204.1	208.6	213.1
110	164.4	170.1	175.7	181.3	186.9	192.4	197.9	203.4	208.9	214.2	219.6	225.0	230.3	235.5	240.7	245.8
120	187.3	193.8	200.2	206.6	213.0	219.2	225.5	231.8	238.0	244.1	250.2	256.3	262.4	268.3	274.3	280.1
130	211.2	218.5	225.7	233.0	240.2	247.2	254.3	261.3	268.4	275.2	282.1	289.0	295.9	302.5	309.2	315.9
140	236.0	244.2	252.3	260.4	268.4	276.3	284.2	292.1	299.9	307.6	315.3	323.0	330.7	338.1	345.6	353.0
150	261.8	270.9	279.8	288.8	297.7	306.4	315.2	323.9	332.6	341.1	349.6	358.2	366.7	374.9	383.3	391.5
160	288.4	298.4	308.2	318.1	327.9	337.5	347.2	356.8	366.4	375.8	385.2	394.7	404.0	413.0	422.2	431.3
170	315.8	326.8	337.6	348.4	359.2	369.7	380.3	390.8	401.3	411.6	421.9	432.2	442.4	452.4	462.4	472.3
180	344.1	356.1	367.8	379.6	391.3	402.8	414.3	425.8	437.3	448.4	459.6	470.9	482.0	492.9	503.8	514.6
190	373.2	386.1	398.9	411.7	424.4	436.8	449.3	461.7	474.2	486.3	498.4	510.7	522.8	534.5	546.4	558.1
200	403.0	417.0	430.8	444.6	458.3	471.7	485.2	498.7	512.1	525.2	538.3	551.6	564.6	577.2	590.1	602.7

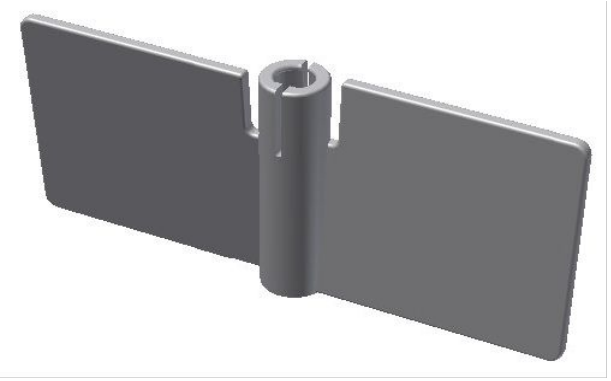

JAR TESTER

2L Jar - Axial Flow Impeller

VELOCITY GRADIENT [s-1]																
Speed [rpm]	Temperature[^{0}C/^{0}F]															
	0 / 32	2 / 35.6	4 / 39.2	6 / 42.8	8 / 46.4	10 / 50	12 / 53.6	14 / 57.2	16 / 60.8	18 / 64.4	20 / 68	22 / 71.6	24 / 75.2	26 / 78.8	28 / 82.4	30 / 86
10	2.09	2.16	2.24	2.31	2.38	2.45	2.52	2.59	2.66	2.73	2.79	2.86	2.93	3.00	3.06	3.13
20	5.92	6.12	6.32	6.53	6.73	6.92	7.12	7.32	7.52	7.71	7.90	8.10	8.29	8.47	8.66	8.85
30	10.87	11.24	11.62	11.99	12.36	12.72	13.08	13.45	13.81	14.16	14.51	14.87	15.22	15.56	15.91	16.25
40	16.73	17.31	17.88	18.46	19.03	19.58	20.14	20.70	21.26	21.80	22.35	22.90	23.44	23.96	24.50	25.02
50	23.38	24.19	24.99	25.79	26.59	27.37	28.15	28.93	29.71	30.47	31.23	32.00	32.76	33.49	34.24	34.97
60	30.74	31.80	32.85	33.91	34.95	35.98	37.01	38.03	39.06	40.06	41.05	42.06	43.06	44.02	45.00	45.97
70	38.73	40.08	41.40	42.73	44.05	45.34	46.63	47.93	49.22	50.48	51.73	53.01	54.26	55.48	56.71	57.93
80	47.32	48.97	50.58	52.20	53.81	55.39	56.98	58.55	60.13	61.67	63.21	64.76	66.29	67.78	69.29	70.77
90	56.47	58.43	60.35	62.29	64.21	66.09	67.99	69.87	71.75	73.59	75.42	77.28	79.10	80.88	82.68	84.45
100	66.14	68.43	70.69	72.95	75.21	77.41	79.63	81.83	84.04	86.19	88.34	90.51	92.65	94.72	96.83	98.91
110	76.30	78.95	81.55	84.17	86.76	89.31	91.86	94.41	96.95	99.43	101.91	104.42	106.88	109.28	111.72	114.11
120	86.94	89.96	92.92	95.90	98.86	101.76	104.67	107.57	110.47	113.30	116.12	118.98	121.79	124.52	127.29	130.01
130	98.03	101.43	104.78	108.14	111.47	114.74	118.02	121.29	124.56	127.75	130.93	134.15	137.32	140.40	143.53	146.60
140	109.56	113.36	117.09	120.85	124.58	128.23	131.90	135.55	139.21	142.77	146.33	149.93	153.47	156.91	160.41	163.84
150	121.50	125.72	129.86	134.03	138.16	142.21	146.28	150.33	154.39	158.34	162.28	166.27	170.20	174.02	177.90	181.70
160	133.85	138.50	143.06	147.65	152.21	156.67	161.15	165.61	170.08	174.43	178.78	183.18	187.50	191.71	195.98	200.17
170	146.60	151.68	156.68	161.71	166.70	171.58	176.49	181.38	186.27	191.04	195.80	200.61	205.35	209.96	214.64	219.23
180	159.72	165.26	170.71	176.18	181.62	186.94	192.29	197.62	202.95	208.14	213.33	218.57	223.74	228.76	233.85	238.85
190	173.21	179.22	185.13	191.07	196.96	202.74	208.54	214.31	220.10	225.73	231.35	237.04	242.64	248.08	253.61	259.03
200	187.07	193.56	199.94	206.35	212.72	218.95	225.22	231.45	237.70	243.78	249.85	256.00	262.04	267.92	273.89	279.75

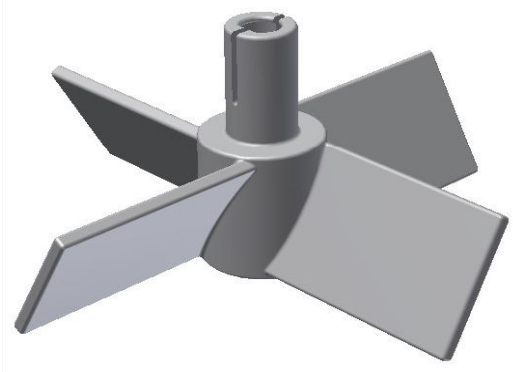

DISTRIBUTED BY:
AUSTRALIAN SCIENTIFIC PTY LTD
11 McDOUGALL ST, KOTARA NSW 2289
TEL: 1800 021 083 - FAX: 02 4956 2525
sales@austscientific.com.au - www.austscientific.com.au